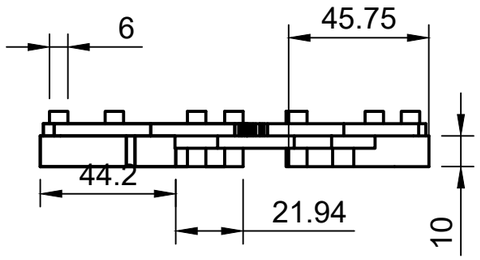

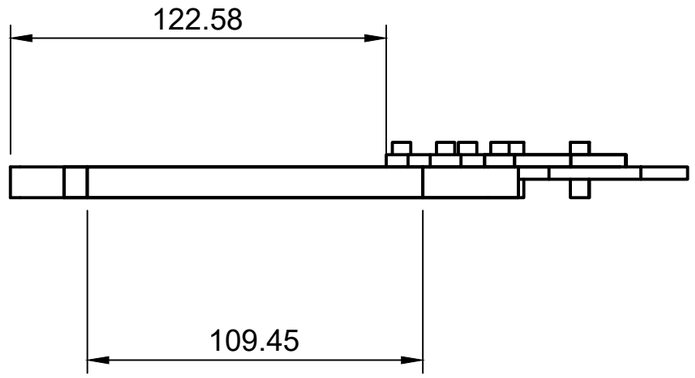

Parts List			
Qty	Part Number	Material	Mass
2	2025-10-12-12-27-50-455	Steel	8.72 g
8	2025-10-12-12-41-17-092	Steel	3.995 g
4	2025-10-12-12-45-11-913	Steel	34.392 g
3	2025-10-12-13-17-20-818	Steel	134.808 g
1	2025-10-12-13-49-26-949	----	0.00 g

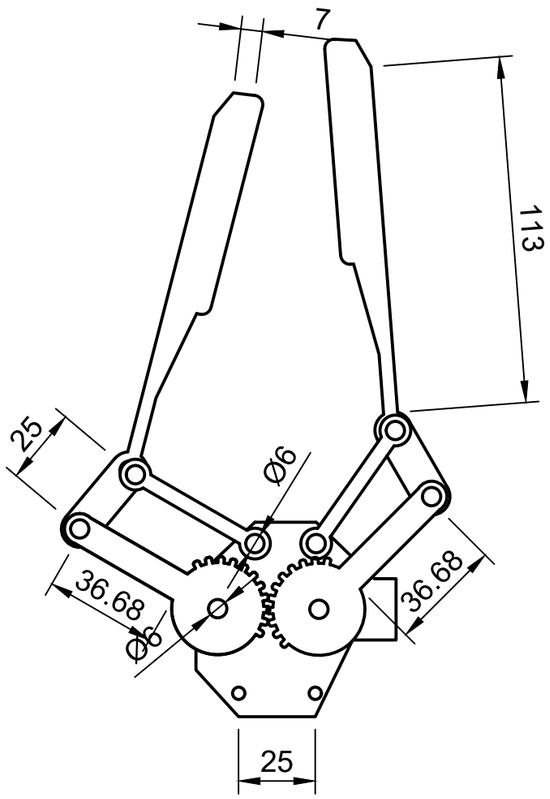

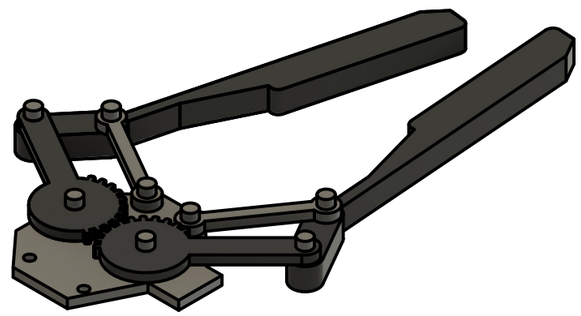

Dept.	Technical reference	Created by	Approved by
CSE	21225040230	MEGALA M S	DR.SARAVANAN M P
		Document type: SKETCH	Document status
		Title: EX11DESIGN THE VARIOUS PART OF THE MECHANICAL COMPONENT AN/S ASSEMBLE	DWG No.
			Rev. E.N / Date of issue 11/3/2026 / Sheet 1/1